OCULAR



IQ WALLBOX INSTALLATION GUIDE

IOCAH39-7S / IOCAH39-7T
IOCAH39-22S / IOCAH39-22T

Version 3.2 - *26NOV2026*

ocularcharging.com.au
sales@ocularcharging.com.au
1300 912 650

CONTENTS

Specifications 3
Product Overview 4
Safety Instructions 5
Notes Before Installation 6
Tools Required 6
Box Contents 6
Wall Mounting and Wiring 7
Power Cable Wiring 8
Internet Connection and Charger Mounting 9
Pre- and Post-Energise Testing 10
Web-Interface Access and WiFi Connection 11
Installation Verification 12
Status Indicator 13
LCD Screen Display Details 14
Appendix A - Troubleshooting 16
Appendix B - Change the Charger to ‘Start Charging on Plug’ 17

IMPORTANT!

Read this entire document before installing or using the charger. Failure to do so or to follow any of the instructions and warnings in this document can result in fire, electrical shock, serious injury, or death.

The charger must be installed by a qualified electrician.

The entire installation must comply with the latest AS 3000 standards.

SPECIFICATIONS

Model Number	IOCAH39-7S	IOCAH39-7T	IOCAH39-22S	IOCAH39-22T
Power				
Power Output	7.2kW (1-Phase)		22kW (3-Phase)	
EV Charging Connector	Type-2 Socket	5m Type-2 Cable	Type-2 Socket	5m Type-2 Cable
Input and Output Voltage	230V ± 20%		400V ± 20%	
Input and Output Current	32A max per phase			
Recommended Circuit Breaker	40A type A RCBO			
Frequency (Hz)	50/60Hz			
User Interaction				
Display	4.3" Touch Screen + LED indication lights			
RFID Reader	ISO14443 Type A cards compatible			
Charger Control Method	Mobile app, RFID, plug and charge			
Safety				
Internal RCD	Type A & 6mA DC			
Electrical Protection	Over current, Short circuit, Over voltage, Under voltage, Ground fault, Lightning surge, Over temperature			
Communication				
OCPP	1.6J and 2.0.1 (Firmware upgrade required)			
Internet Connection	Ethernet, WiFi, 4G (optional)			
Communication Type	Modbus (TCP/IP)			
Energy Meter	MID Meter			
Load Control	Compatible with Ocular Load Controller or OCPP smart profiles			
General Data				
Ambient Air Temperature for Operation	-30°C to +50°C			
Ambient Air Temperature for Storage	-40°C to +70°C			
Working Humidity	5% - 95% relative humidity, non-condensing			
Protection Rating	IP55, IK10			
Mounting	Wall Mount / Pole Mount			
Dimension (H x W x D, mm)	500 x 283 x 243 mm			
Net Weight	4 kg	5.5 kg	4.5 kg	7 kg
Certification	CE, EN IEC61851-1, EN IEC61851-21-2, IEC61008-1, IEC62955			
Warranty	2 Years (Extended warranties available)			

PRODUCT OVERVIEW



No	Item
1	Window for MID Meter Value
2	LED Indicator
3	4.3” LCD Touch Screen
4	RFID Card Reader
5	Type-2 Socket
6	Type-2 Cable (Tethered model)

SAFETY INSTRUCTIONS

This document contains important instructions and warnings that must be followed when installing and maintaining the Ocular IQ Wallbox.

WARNINGS

Installation and maintenance of the charger should only be conducted by a qualified and licensed electrician.

Make sure that materials used, and installation procedures follow local building codes and safety standards, including AS/NZS 3000:2018.

Do not install or use the charger near flammable, explosive, harsh, or combustible materials, chemicals, or vapours.

Always deenergise and isolate the unit before installation, opening the unit, or performing maintenance from the circuit breaker or isolator.

Do not attempt to open, disassemble, repair, tamper with, or modify the charger unless you are a licensed electrician. The unit is not user serviceable.

Do not use the charger if it appears defective, cracked, frayed, broken, damaged, or fails to operate.

Do not use this charger if the EV charging cable is frayed, has broken insulation, or shows any other indication of damage.

Do not use this charger if the enclosure or EV charging connector is cracked, open, or shows any indication of damage.

Do not touch the charger sockets with sharp metallic objects, such as wire, tools, or needles, and do not put fingers into the sockets.

Incorrect installation and usage of the charger could potentially damage the vehicle's battery and/or the charger itself, voiding the warranty for both.

Do not operate the charger in temperatures outside its range of -30°C to +50°C.

Ensure that the EV charging cable is positioned properly in the charging sockets. Do not use cleaning solvents on any charger components.

NOTES BEFORE INSTALLATION

The charger should be protected by an external Residual Current Device (RCD) to be installed in the upstream circuit which complies with the following:

- Type-A Rated residual operating current not exceeding 30 mA
- Required as per Appendix P, AS/NZS 3000:2018 Australian and New Zealand Standards for EV charging stations.

Recommended (Note installation requirements are site specific and may vary):

- 40A 30mA Type A RCBO
- Isolation Switch close to the charger
- 10mm^2 2C (or 4C) + E Cabling

TOOLS REQUIRED

- Philips #1 screwdriver
  Philips #2 screwdriver
- 2.5 mm flat blade terminal screwdriver
- Step drill bit
- Electric drill
- EV charger tester (e.g. Metrel 3152)
- Laptop or mobile device
- Ferrule crimping tool
- Slotted #6 screwdriver

BOX CONTENTS



EV Charger



Opening Tool

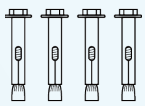

Screw M6*50 x 4



Screw M6*12 x 1

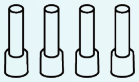

Terminal Crimps (red) x 4

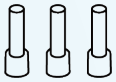

Terminal Crimps (black) x 3

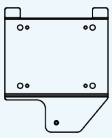

Wall Mounting Bracket x 1

WALL MOUNTING AND WIRING

1. **Install the backplate**
   Slide the backplate down to remove it from the charger. Secure the backplate to the wall using **4 × M6×50 screws.**

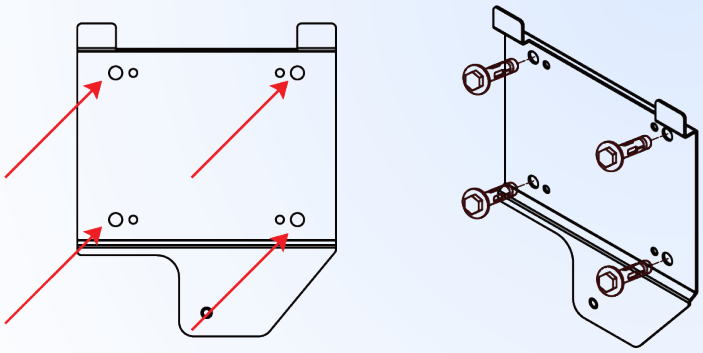

2. **Mount the charger**
   Attach the EV charger securely to the backplate.

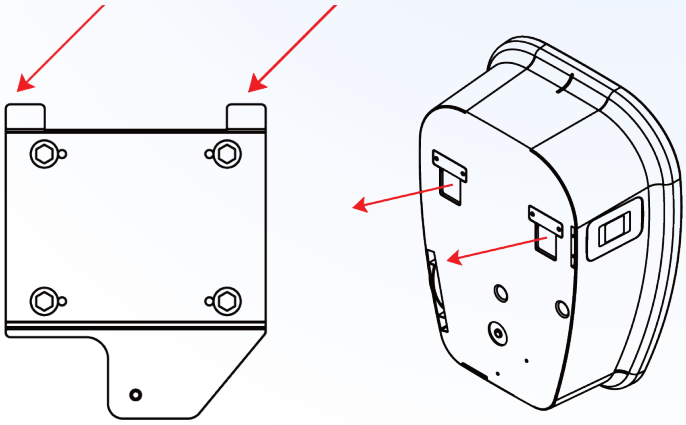

3. **Remove the covers**
   Use the opening tool from the toolbox to remove the front cover. Then unscrew and remove the inner black cover.

   Caution: Tighten the screws to **0.2–0.5 Nm**. Do NOT overtighten.

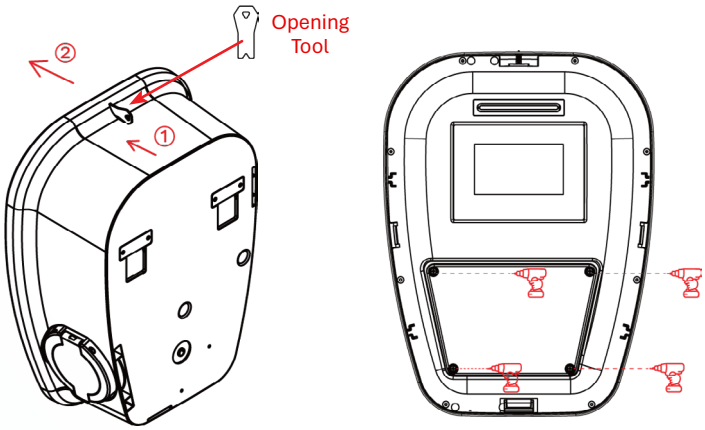

4. **Remove the partition**
   Unscrew and remove the partition. Secure the EV charger to the backplate using the **M6×12 screw** from the toolbox.

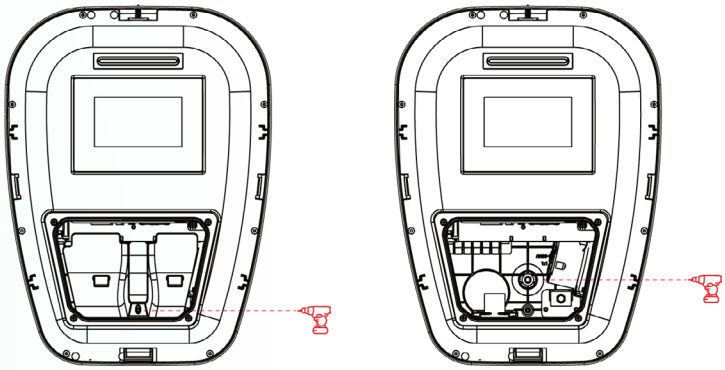

POWER CABLE WIRING

1. **Install the waterproof cable gland**
   a. Select the appropriate waterproof cable gland for the power cable
   b. Locate the marked power cable entry point and **drill the opening using a stepped drill bit to the required diameter.**
   c. Remove any burrs or sharp edges, then install and securely tighten the waterproof cable gland.

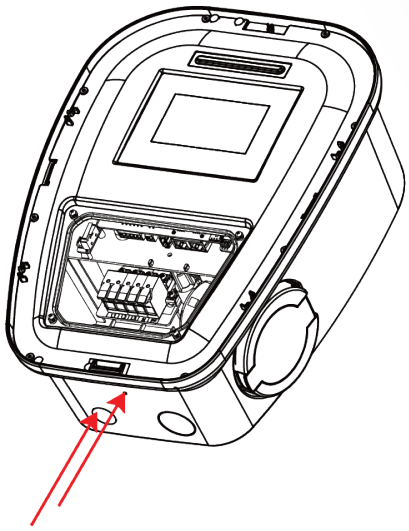



2. **Connect the power cable**
   a. Route the power cable through the cable gland and connect it to the terminal block.
   b. Reinstall and secure the partition.

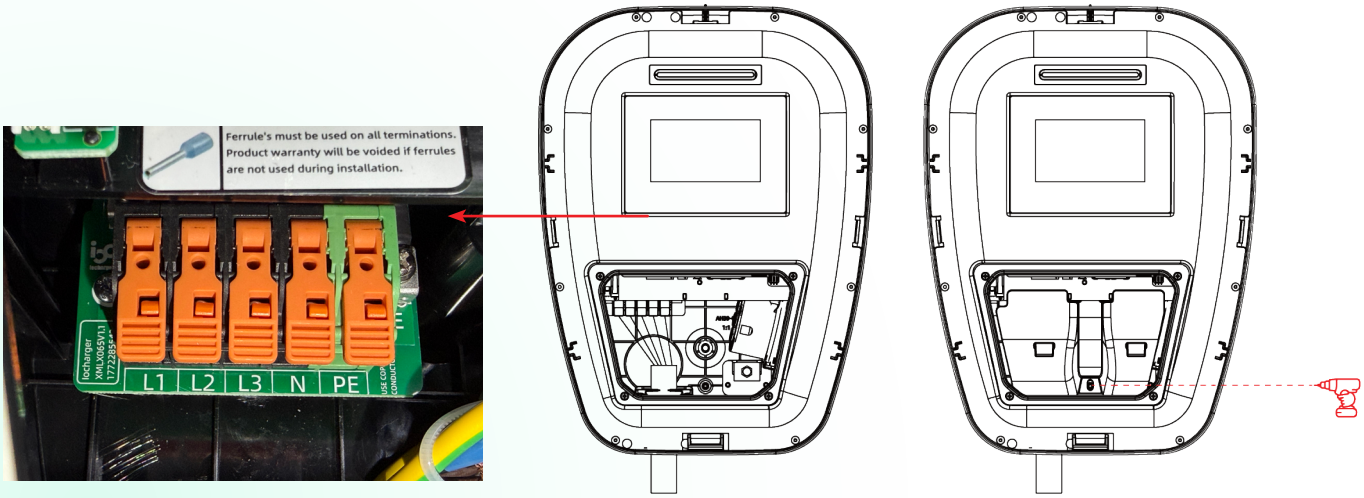

INTERNET CONNECTION AND CHARGER MOUNTING

Internet Connection

The charger must be successfully connected to the internet during the installation process to ensure proper operation. There are two options for internet connectivity:

- **Ethernet** (recommended for maximum internet stability) : Connect the ethernet cable to the WAN port on the backplate.
- **In built 4G SIM card** : If the IQ Wallbox has been ordered with a built in 4G modules, a 4G SIM card may have also been pre-installed. In this case the charger will come online when powered up
- **WiFi :** If WiFi is being used, this will be set up after the charger has been energised.

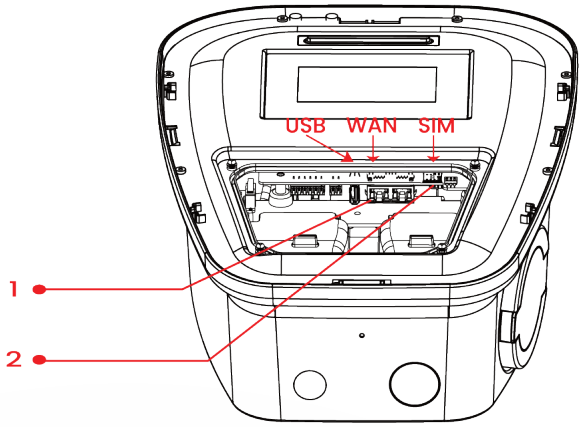

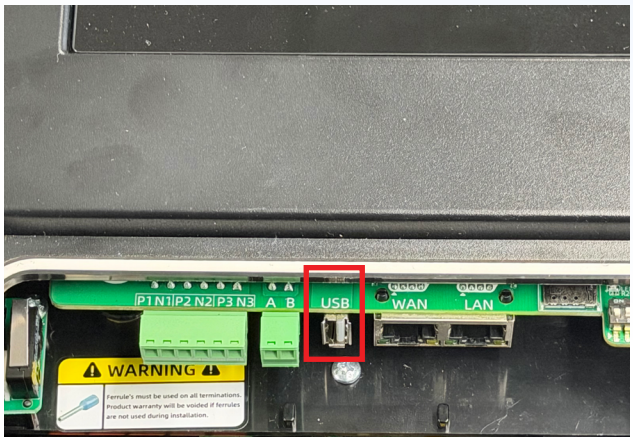

Secure Cover

Make sure all screws on the cover are fully tightened to prevent fault detection.

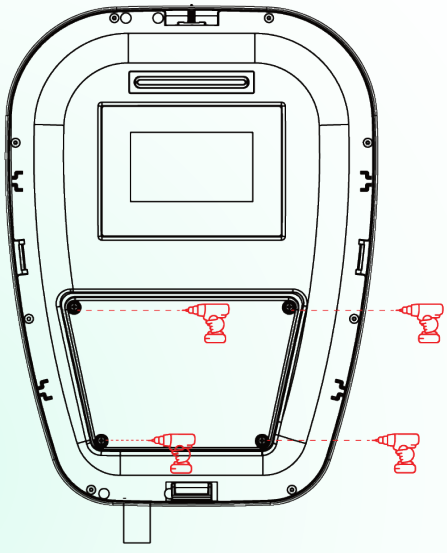

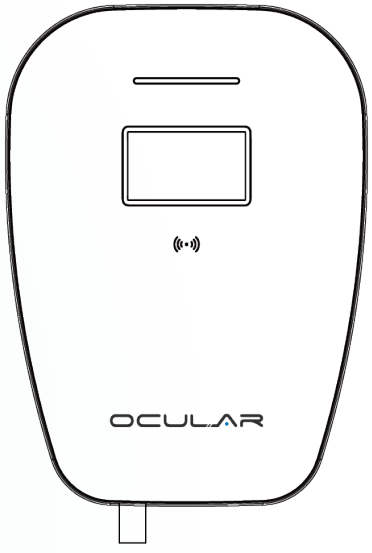

PRE- AND POST-ENERGISE TESTING

1. **Pre-energising**

- Ensure connections are secure and power on the system.
- Verify all cabling is wired properly.
- Energise the charger.
- LED Lights and Screen should turn on.
- If the LED flashes red please refer to the Troubleshooting page.

2. **Post-energising**

- Use an EV charger tester (e.g Metrel, Fluke) to run testing following AS/NZS 3000 Section 8.3.3.1.
- If the charger does not begin to charge under testing with the EV Tester, it may not be configured to ‘start charging on plug’, please refer to Appendix C to set it as ‘start charging on plug’.
- After testing is complete ensure, settings are restored to the state they were in at delivery, as the charger may have been preconfigured.
- Test functionality and perform safety inspection.

WEB-INTERFACE ACCESS AND WIFI CONNECTION

1. **Find the chargers' local hotspot using laptop or smart device.**

   Search for the charger's hotspot like you would for any WiFi network.
   This hotspot will have the following SSID: AP_IOC- ******
   (if needed you can find the full SSID on the sticker side of the charger)

   The password for this Hotspot is: IOC12345

2. **Navigate to the web-interface of the Ocular Charger.**

   Open a web browser (Chrome, Safari, Edge) and search: 192.168.10.1:8900
   The web interface will ask for Username and Password:

   The log in information will be: Username : install
   Password : installer123

   You will be asked to change it to a new password.
   We recommend 'Evcharging123'
   Write the new login password here: _____
   Please hand this book to the user after the installation so that they can keep track of the new password.
   After entering the username and password, the Ocular web-interface will load.

3. **(Optional): Set up WIFI configuration (not needed if ethernet is used)**

   - Navigate to the Network tab (see picture below).
   - Click the "Scan" button to start scanning for available WiFi network.
   - Use the dropdown list to select the required network, enter the password.
   - Click Submit then Reboot (top right-hand corner) to apply changes.
   - You will then need to log back in to the web-interface to continue configuration.

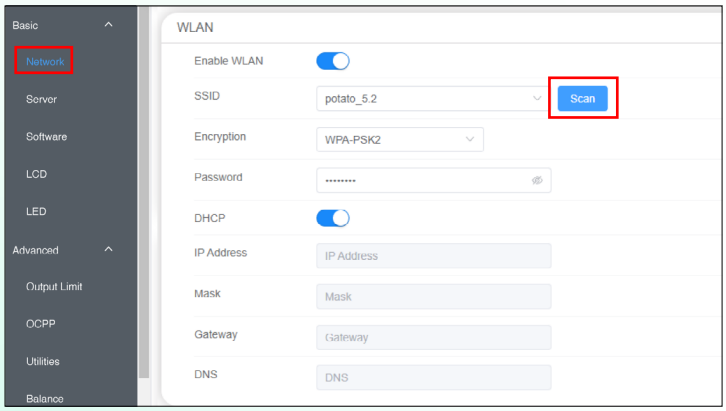

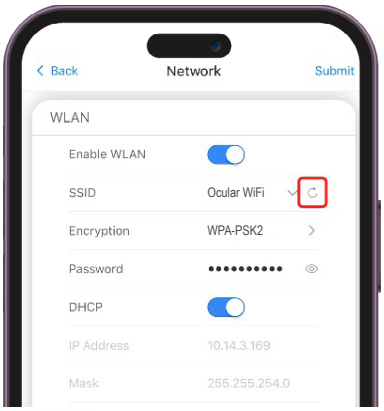

Note: The interface may look different on a smart phone, but all the settings required are the same.

INSTALLATION VERIFICATION

Verify that the charger is connected to the OCPP Server by checking Icons on charger screen as shown in the figure below. See Appendix B for more information.

If the charger is showing (Server Error) then the charger will not function and this will likely require a return to site. Check the WiFi/ethernet connection. If problem persists, contact Ocular support on 1300 912 650.

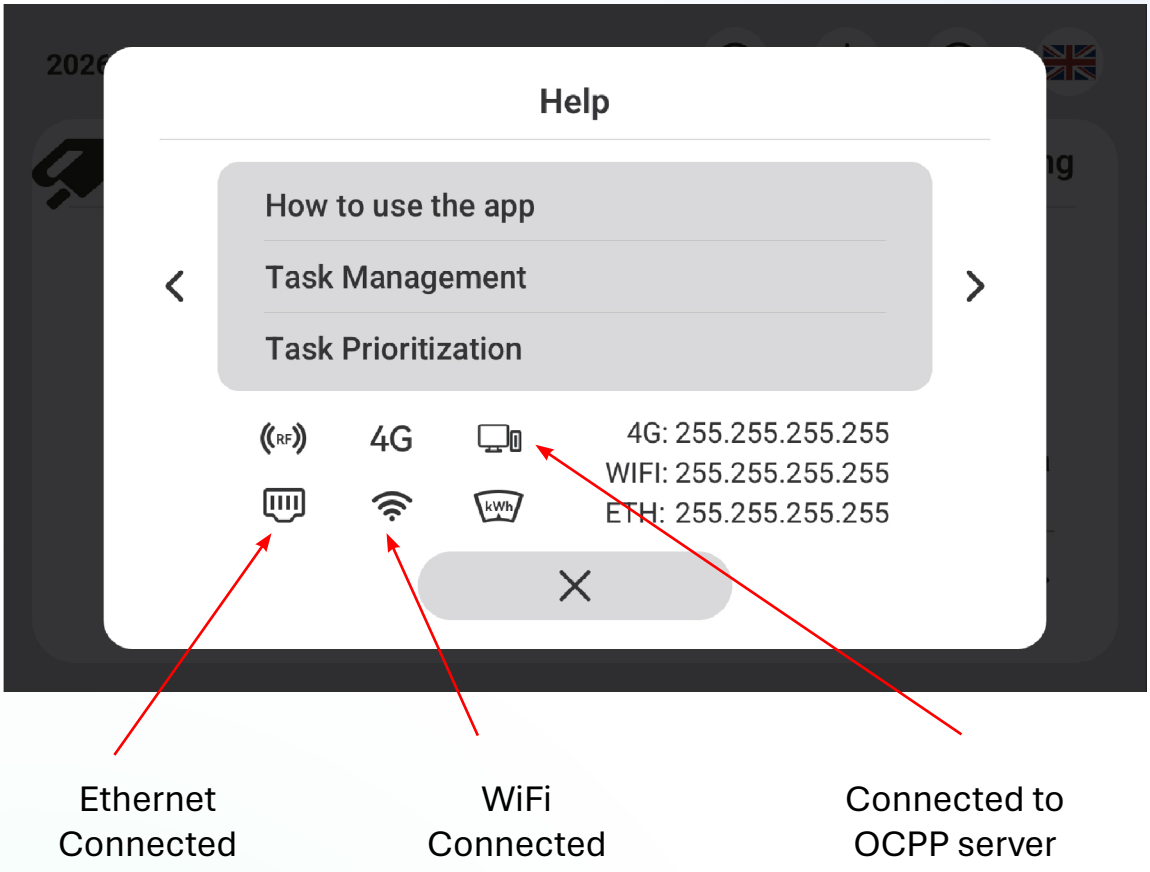

STATUS INDICATOR

LED Diagram	Definition	LED Status
	Idle	Slow breathing white
	Charging	Fast breathing white
	Suspend	Fast breathing yellow
	Reserved	Slow breathing cyan
	Unavailable	Slow breathing red
	Fault	Flashing red

LCD SCREEN DISPLAY DETAILS

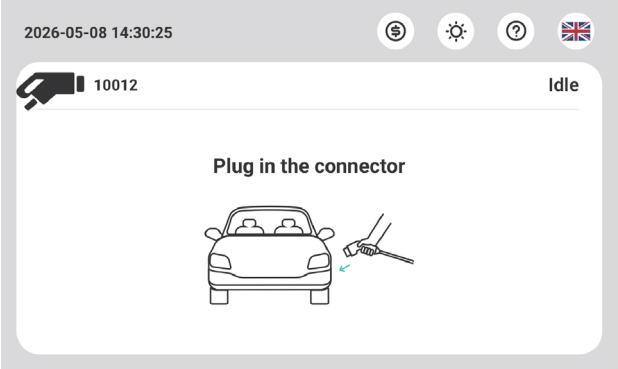

Idle

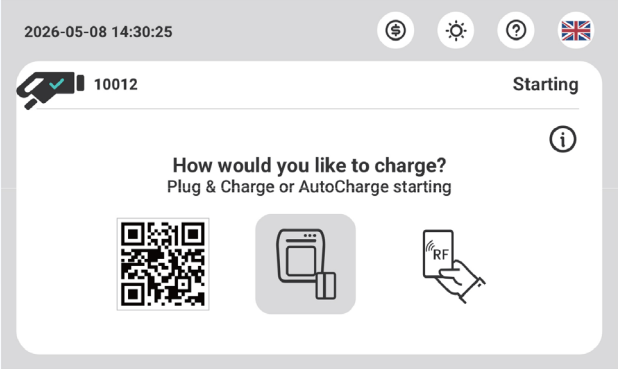

Connect the charging plug

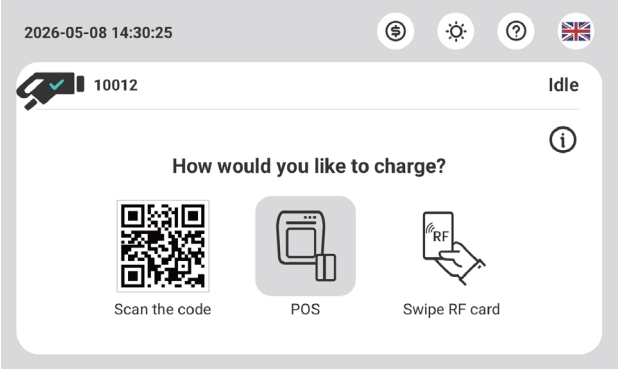

Scan the QR Code or swipe the RFID card to start charging

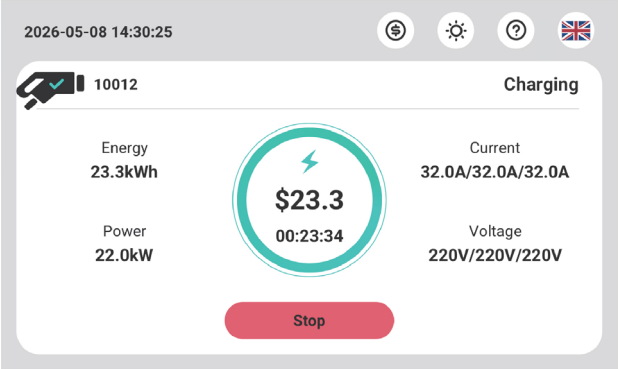

Charging in process

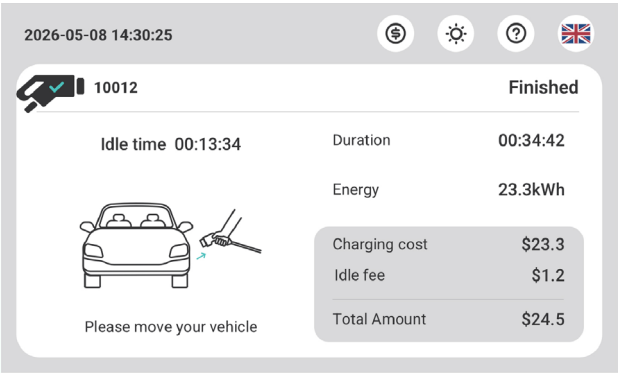

Finished

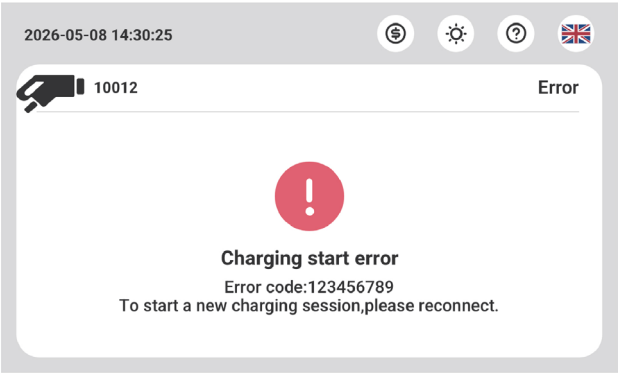

Charging start error

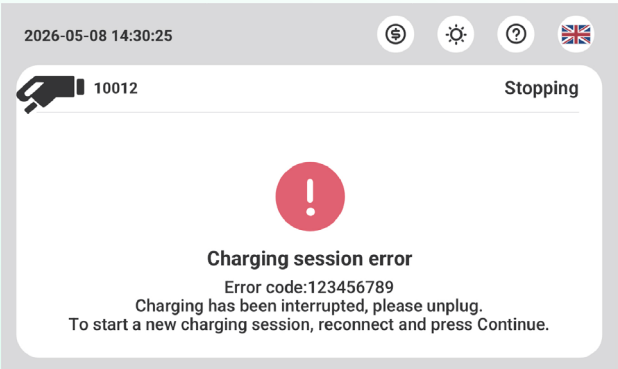

Charging session error

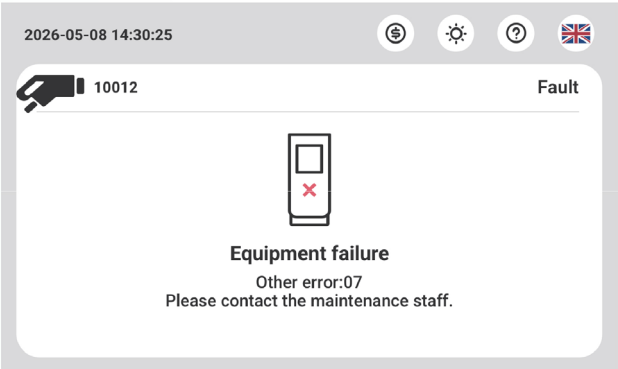

Equipment failure

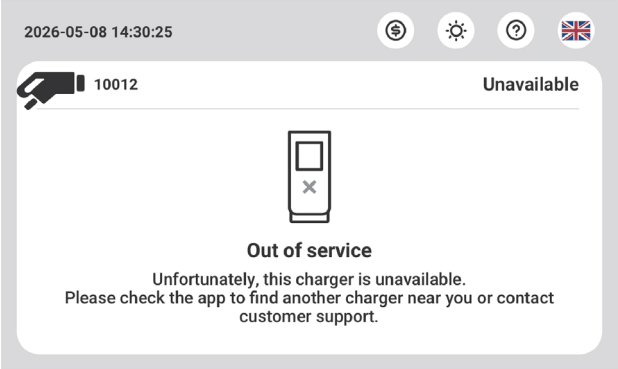

Out of service

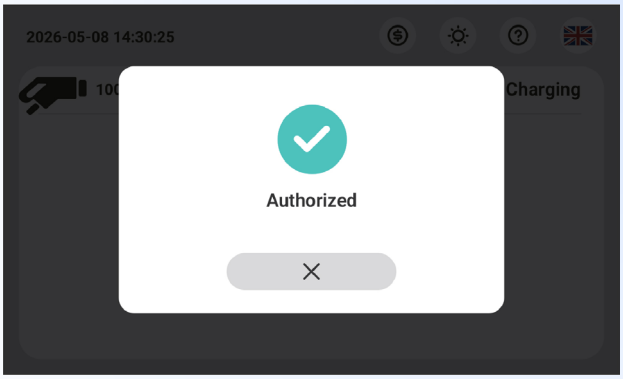

Authorized

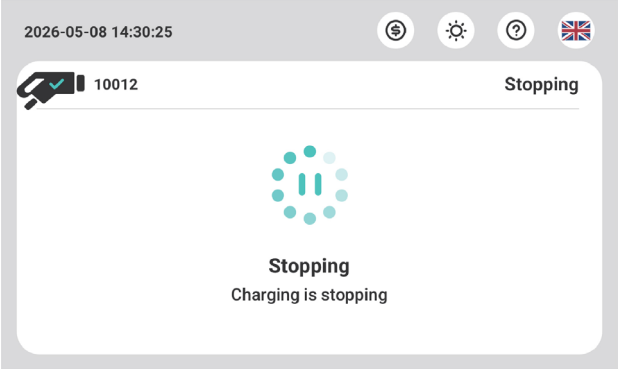

Stopping

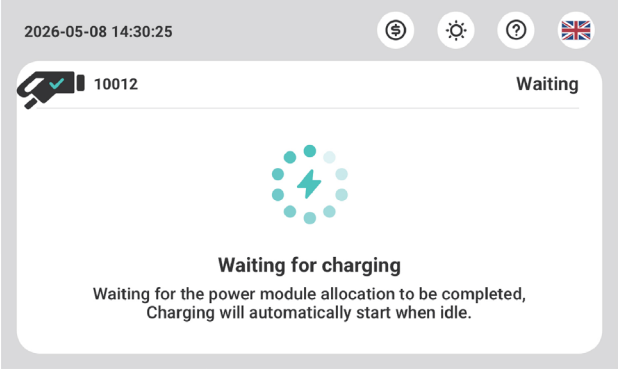

Wait in line

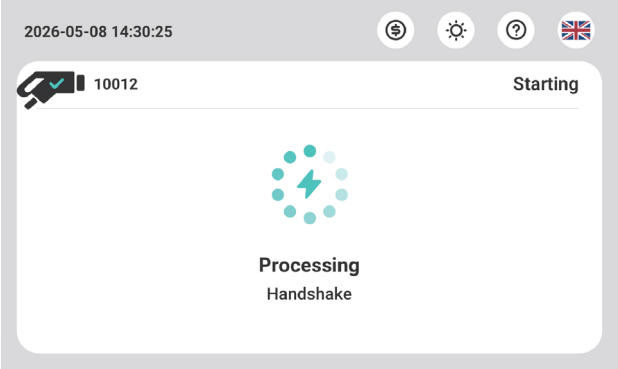

Processing

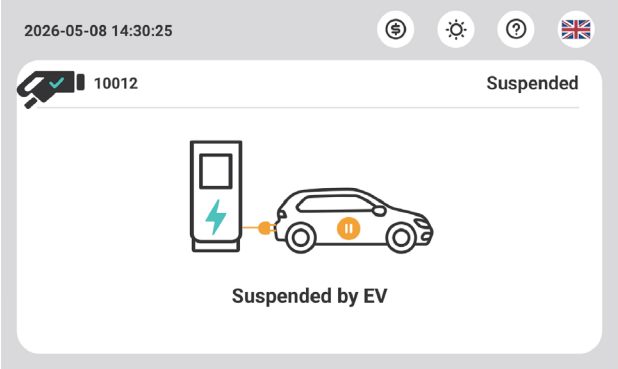

Charging suspend

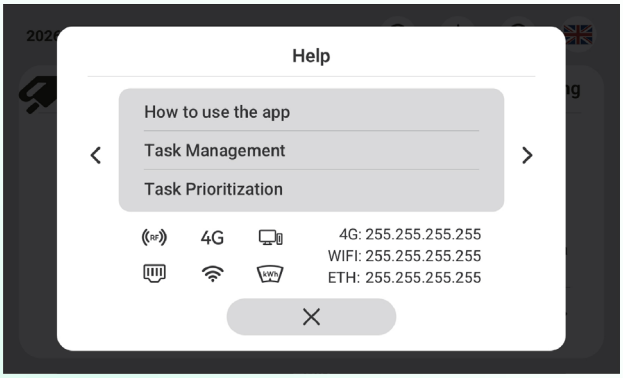

Help screen

APPENDIX A - TROUBLESHOOTING

Situations	Actions
Status indicator is not blue after the charger is powered on	Make sure the AC power input is connected correctly. Turn OFF the charger and then back ON using the switch. If the problem persists, contact your installer for Technical Support.
Status indicator does not flash blue when the charger is connected to the EV	Unplug the charging plug and reconnect it fully to the receptacle on the EV. Inspect the cable and plug for damage. Inspect the EV and its receptacle for damage. If the situation persists, contact your installer for Technical Support.
Status indicator flashes red while charging	There is a temporary error. Wait until the temporary error is resolved and the charger returns to normal condition. It usually takes less than 10 seconds. If the status indicator doesn't return to blue, turn OFF the charger and then back ON. If the situation persists, contact Ocular Charging for Technical Support.
Status indicator is solid red	There is a critical error. Unplug the charging plug from the EV immediately. Turn OFF the charger and then back ON. If the situation persists, contact your installer for Technical Support.
"Door open" shown on screen.	Ensure the screen at the bottom of the charger that fixes it to the backplate is tightened. There is a sensor that detects if this screw is not in place.

APPENDIX B - CHANGE THE CHARGER TO 'START CHARGING ON PLUG'

If the charger does not automatically start charging while testing, then it may not be set to **Charge on Plug**. Follow the steps below to change it. The user will be able to change this setting in the Ocular App later.

- Follow the instructions on Page 11 to log into the charger web-interface.
- Navigate to the "Software" Tab under "Basic"
- Under the subsection "Switcher", tick the box next to "Start Charging on Plug"
- Click submit "Submit" on the top right-hand corner of screen, and then click "Restart" on the Home page.

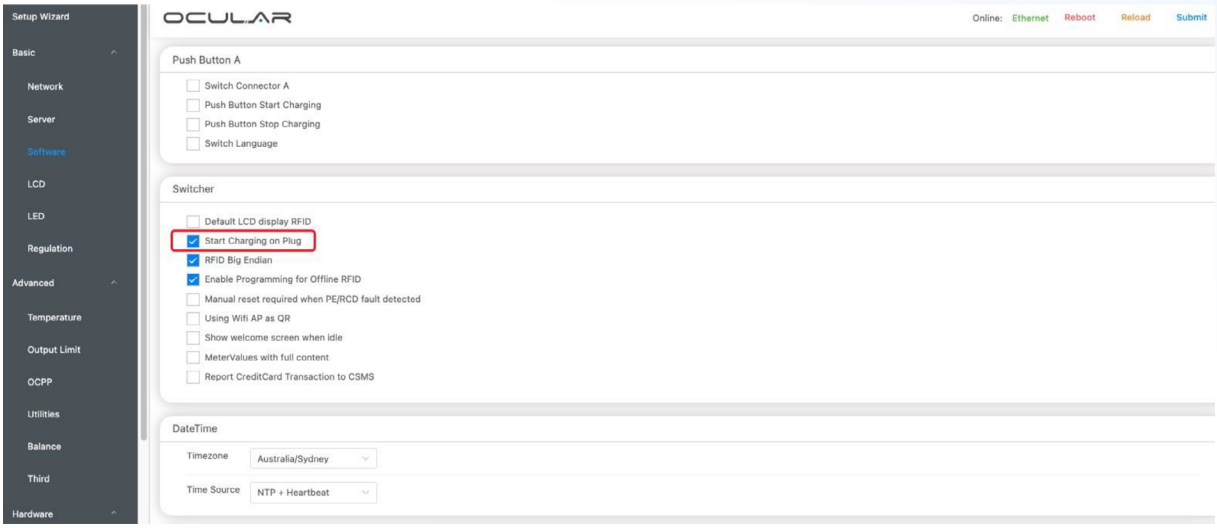

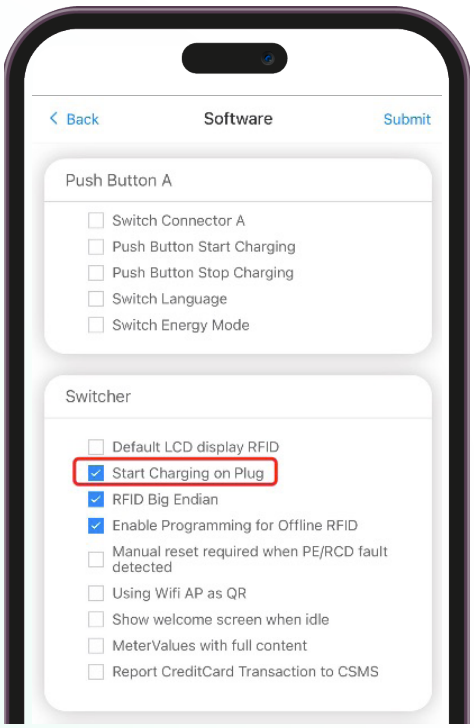

OCULAR

IQ WALLBOX

ocularcharging.com.au

sales@ocularcharging.com.au

1300 912 650